HOOKER® FURNISHINGS

ASSEMBLY INSTRUCTION

ITEM: 7228-85129-35 Three-Drawer Chest

Thank you for purchasing this quality product. Be sure to unpack carefully looking for small parts which may have come loose during shipment.
Read all instruction and study the drawing carefully before starting the assembly process.

HARDWARE PACK

No.	Drawing	Description	Q'ty
A		Tipping restraint	1

Anti-tip kit is included for use.
We recommend installing for safety reason.

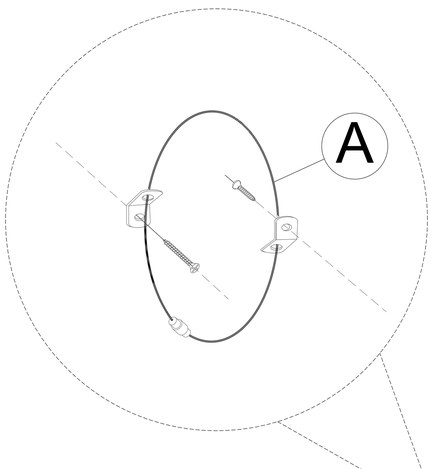

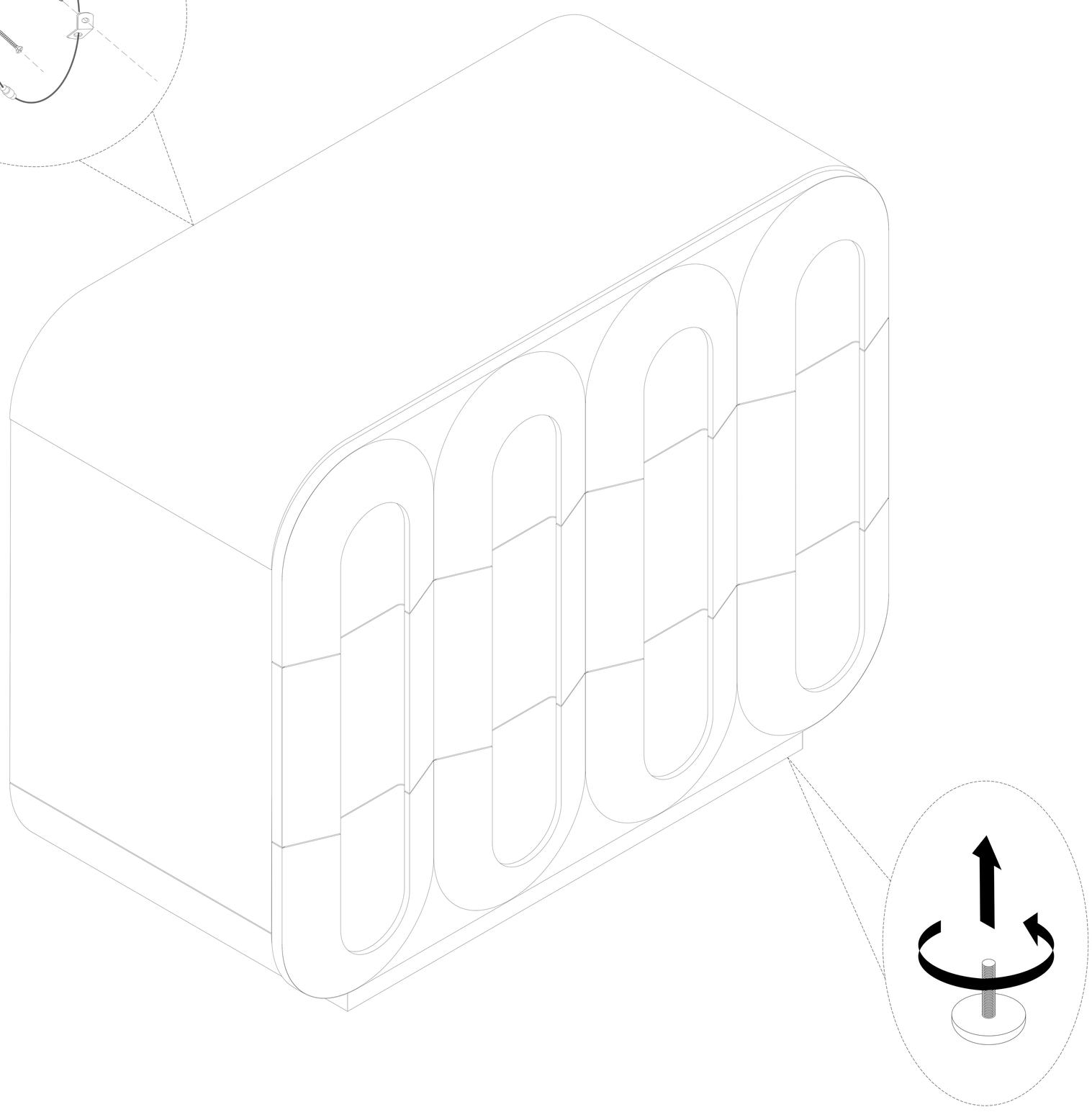

Leveler(4pcs)
Remark: Leveler are pre-installed

Note: Anti-tip kit restrain is provided. Please follow the instructions enclosed with the pack.