PALECEK™

601 PARR BOULEVARD, RICHMOND, CA 94801

LEONARDO QUEEN BED ASSEMBLY INSTRUCTIONS

These instructions are provided for your convenience. It is very important that they are read carefully and completely before beginning installation of this item.(Applies to items 7488-00). Installation by two (2) persons recommended.

PARTS:

A. Headboard x1
B. Footboard rail x1
C. Side rails x2
D. Top Headboard posts x2
E. Leg posts x2
F. Center support x1
G. Bed slat roll
H. Stove bolt x2
I. Screws x12

TOOLS NEEDED:

1. Phillips Head Screwdriver (Not Included).

TO ASSEMBLE:

1). Unpack all contents and place on a non-scratching surface. Save the packaging until assembly is complete.
2). Connect Footboard Rail (B) to Leg Posts (E) by aligning the hooks with the slot and firmtly pushing down.
3). Connect Side Rails (C) with Leg Posts (E) by aligning the hooks with the slot and firmly pushing down.
4). Connect Side Rails (C) with Headboard (A) by aligning the hooks with the slot and firmly pushing down.
5). Insert Top Headboard Post (D) into Headboard (A) and turn clockwise to tighten.
6). Place Center Support (F) in position, aligning holes on Headboard (A) and Footboard Rail (B). Secure with Stove Bolts (H) by using a Phillips Head Screw driver (not included). Ensure that the Center Support feet levelers make contact with the floor.
7). Place Bed Slat Roll (G) onto bed frame. Ensure that the bed slats are evenly spaced, and the first and last slat is in position beyond the installed blocks.
8). Insert the Screws (I) into each predrilled hole to secure the Bed Slats (G).
9). Position bed in final location.
10). Assembly complete.

CARE:

Dust with a soft dry cloth. Do not use cleaning solutions or abrasives.

PALECEK™

601 PARR BOULEVARD, RICHMOND, CA 94801

LEONARDO QUEEN BED ASSEMBLY INSTRUCTIONS

These instructions are provided for your convenience. It is very important that they are read carefully and completely before beginning installation of this item.(Applies to items 9488-00). Installation by two (2) persons recommended.

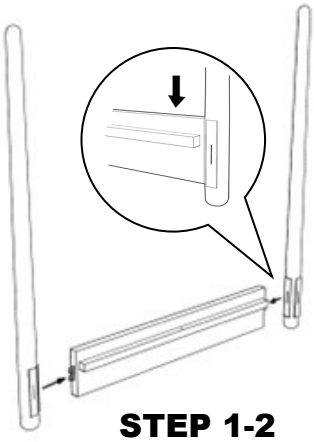

STEP 1-2

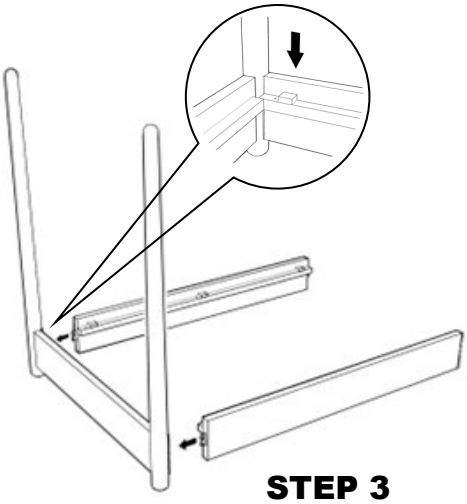

STEP 3

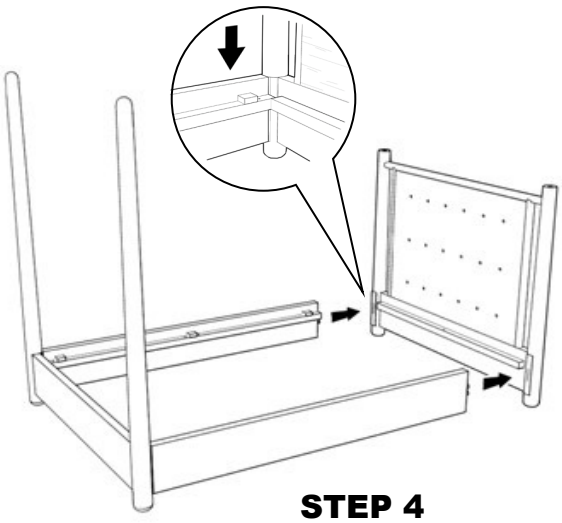

STEP 4

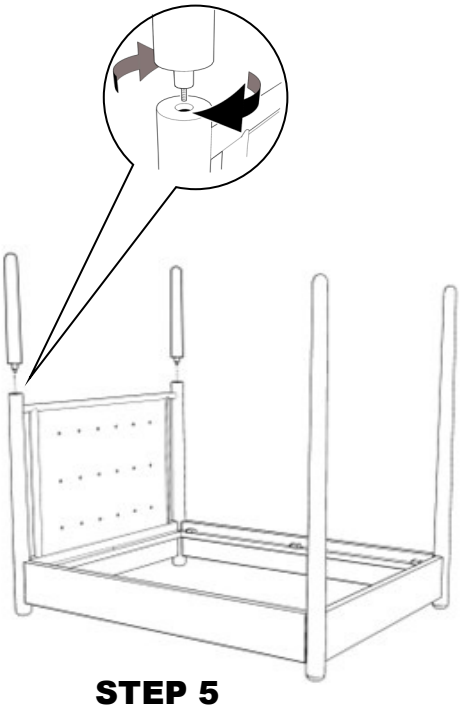

STEP 5

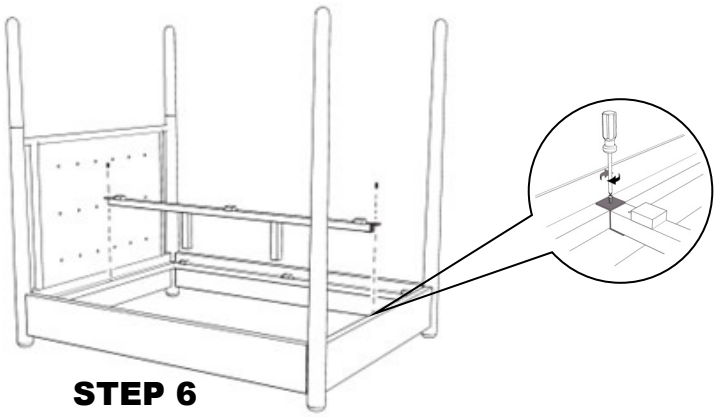

STEP 6

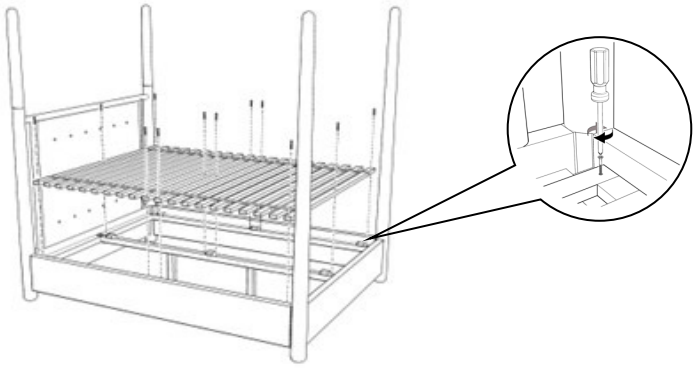

STEP 7-8