ASSEMBLY INSTRUCTION FOR ACME FURNITURE

MODEL# DN03931 SIDE CHAIR

Thank you for purchasing this quality product. Be sure to check all packing material carefully for small parts which may have come loose inside the carton during shipment. Separate, identify and count all parts and metal hardware. Compare with parts list to be sure all parts are present. If any part(s) are missing or damaged,please contact your local furniture dealer.For efficient and speedy service,please indicate the model number and code letter of part(s) needed.

*** Do not fully tighten screws until fully assemble ***

COMPONENT PARTS

DESCRIPTION	PART NAME	Q'TY(PCS)
A	CHAIR BACK 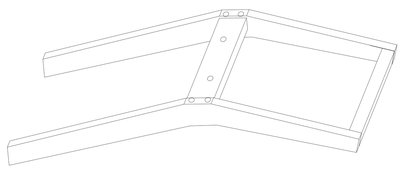	1
B	SEAT WITH FRAME 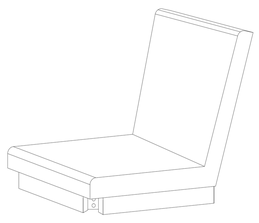	1
C	LEG	2

HARDWARE REQUIRED:

D 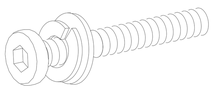 ALLEN BOLT Ø5/16" *3-1/2" - 4PCS

E 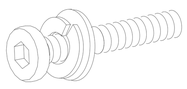 ALLEN BOLT Ø5/16" *2-1/4" - 4PCS

F 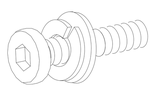 ALLEN BOLT Ø5/16" *1-1/2" - 4PCS

G ALLEN KEY 5MM - 1PC

H COVER 20MM - 2PC

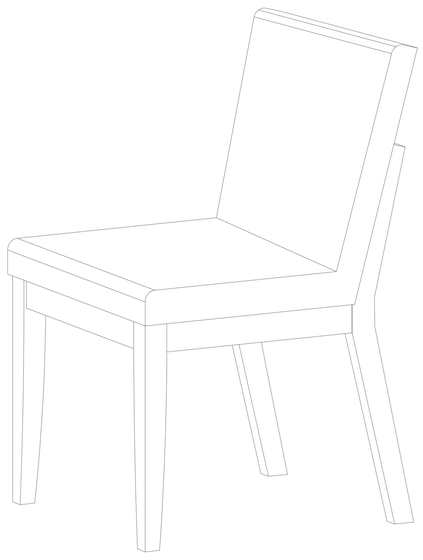

Attention:
*** Some number parts listed on the instruction sheet may not be in parts bag as they may already be assembled. Carefully check parts and packing materials prior to ordering replacements.

How to Assemble:

STEP 1:

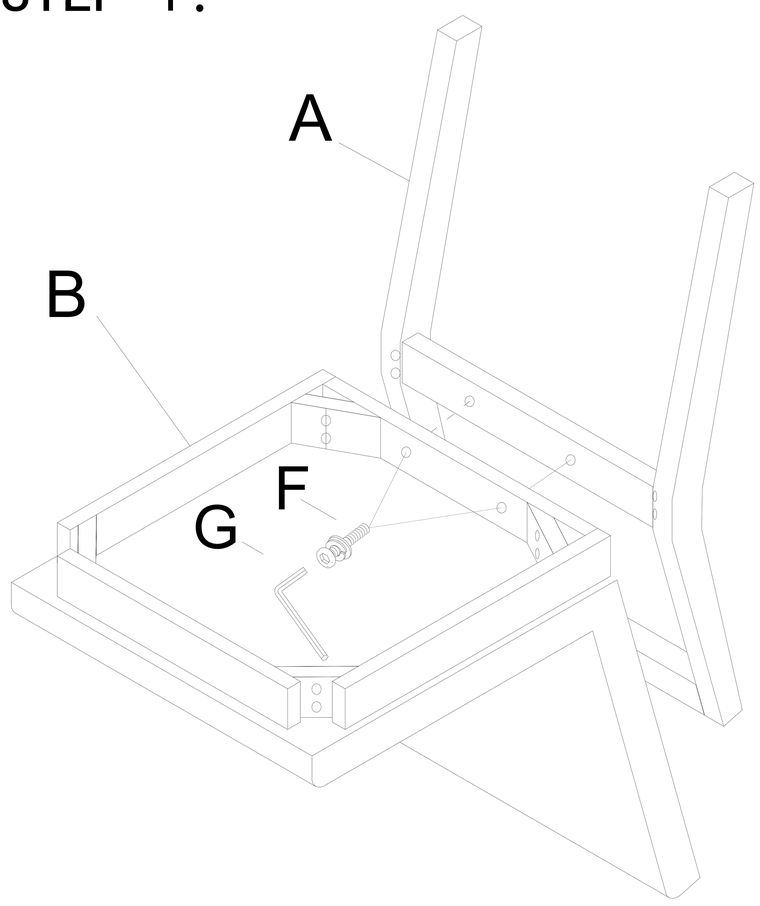

STEP 2:

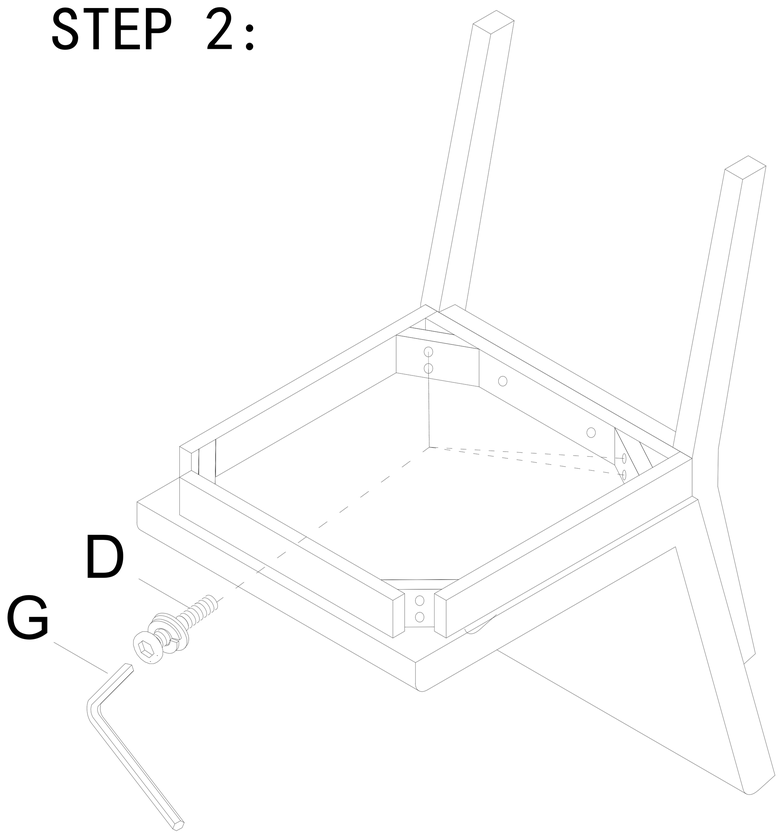

How to Assemble:

STEP 3:

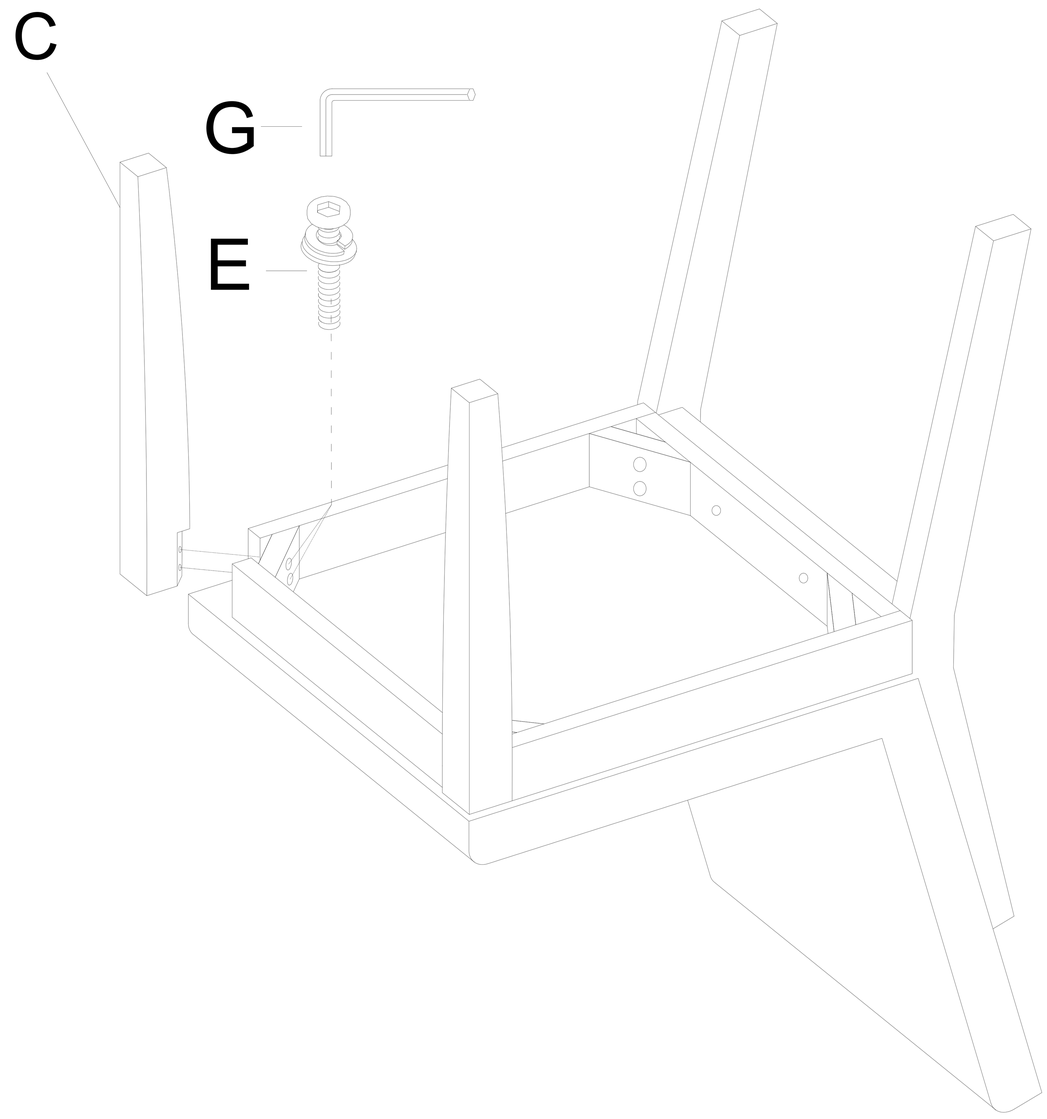

STEP 4:

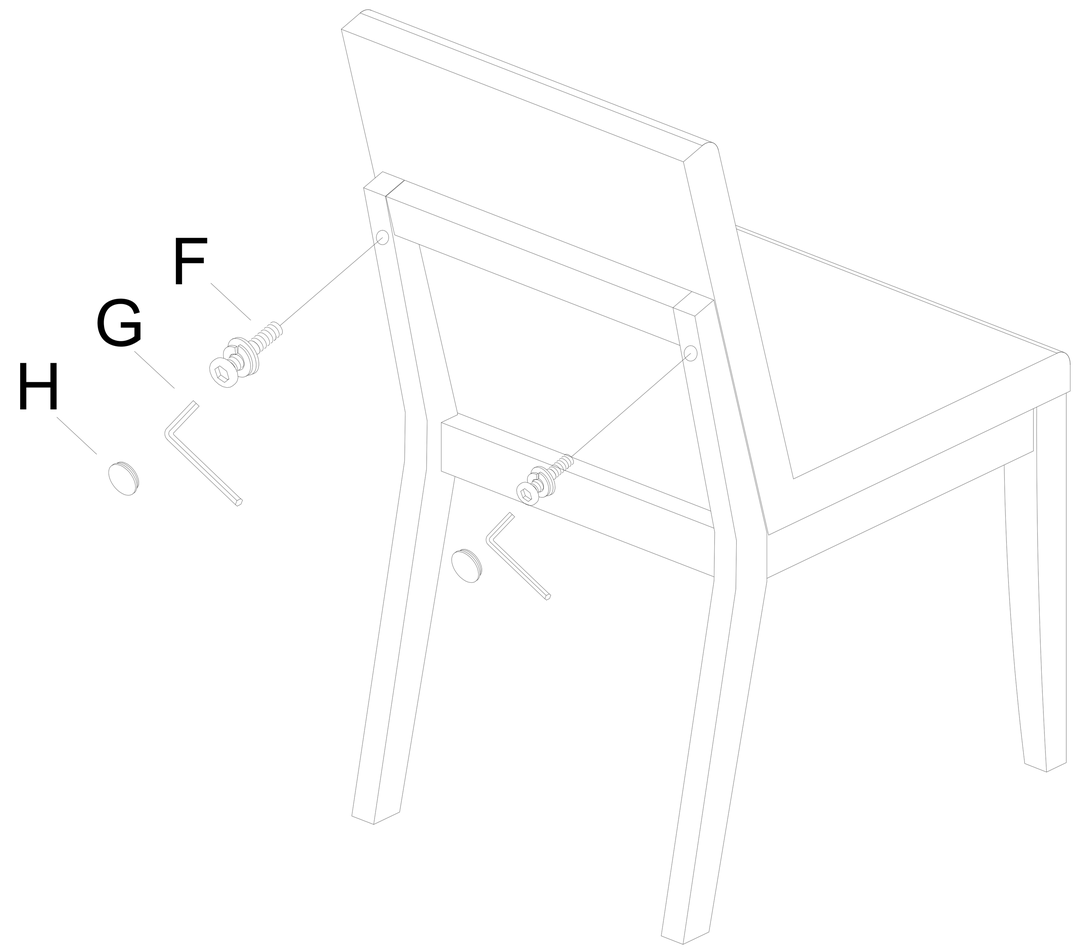

STEP 5:

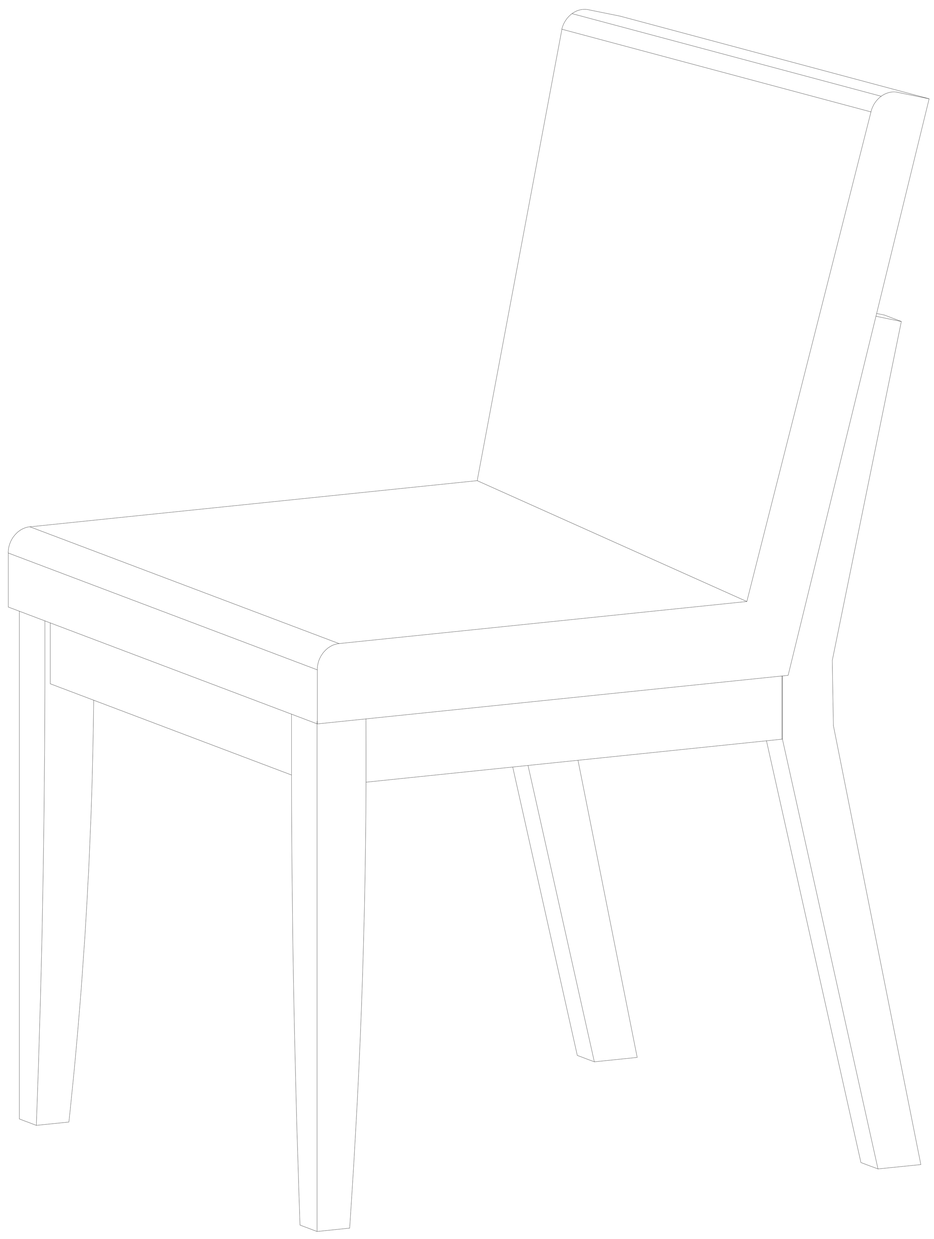

ASSEMBLY COMPLETED!